A Nidec Group Company
Nidec Motors & Actuators
All for dreams

Series SW2L
Motor type 404 360

Design Data	
Commutation	Brushed
Direction of rotation	Bi-directional
Bearing type	A: Ball - B: Sleeve

0278 AL

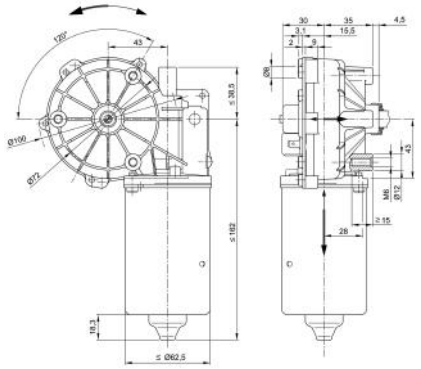

Performance data		
Rated voltage [V]	U_N	24
Nominal torque [Nm]	M_N	8.00
No-load speed [min^{-1}]	n_0	48.0
Nominal power [W]	P_N	36.3
Nominal current [A]	I_N	5.5
Nominal force [kN]	F_N	0.00
Duty cycle		s1

Sensor data	
Pulses	0
Output channels	0

Other data	
Gear ratio	74/1
Gear wheel material	Plastic
Suppression components	4.7µH, 1µF
Enclosure class	IP40
Weight [kg]	1.700

Remarks:

Motor picture

Characteristic curves

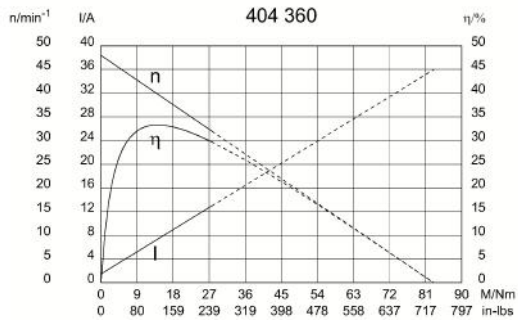

Output shaft drawing (W), Wiring diagrams (S) and Connector layout (K)

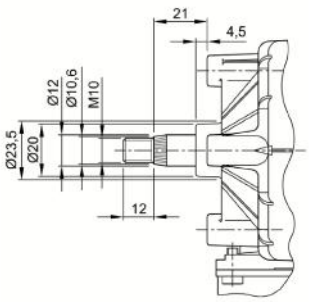

S 30

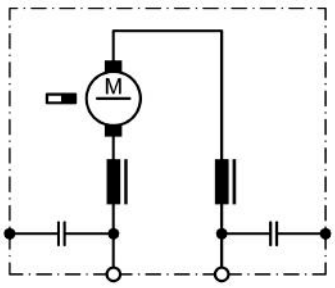

K 144

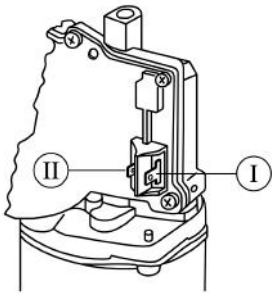

I Blade terminal ends 6,3 x 0,8 DIN 46 244
II Blade terminal ends 4,8 x 0,8 DIN 46 244

NIDEC MOTORS & ACTUATORS
Contact: +421 445 547 234
+421 903 390 520
www.opis.sk
opis@opis.sk