A Nidec Group Company
Nidec Motors & Actuators
All for dreams

Series GMPG
Motor type 404 603

Design Data	
Commutation	Brushed
Direction of rotation	Bi-directional
Bearing type	A:Sleeve - B:Sleeve

0225 AR

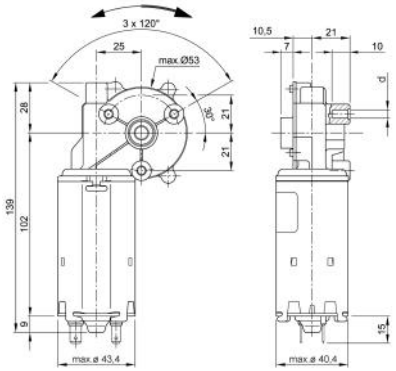

Performance data		
Rated voltage [V]	U_N	24
Nominal torque [Nm]	M_N	1.00
No-load speed [min^{-1}]	n_0	80.0
Nominal power [W]	P_N	7.39
Nominal current [A]	I_N	2.0
Nominal force [kN]	F_N	0.00
Duty cycle		s3

Sensor data	
Pulses	0
Output channels	0

Other data	
Gear ratio	62/1
Gear wheel material	plastic
Suppression components	7,5µH, 1nF
Enclosure class	IP30
Weight [kg]	0.710

Remarks: d = for thread-forming screw M 5 DIN 7500

Motor picture

Characteristic curves

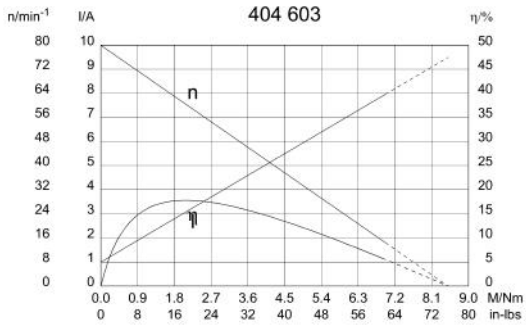

Output shaft drawing (W), Wiring diagrams (S) and Connector layout (K)

W 147

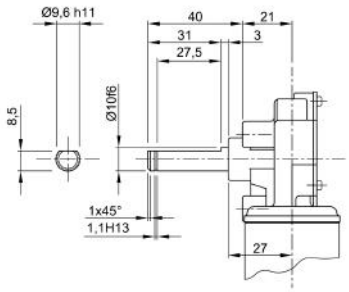

S 74

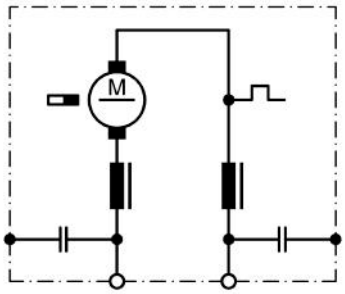

K 117

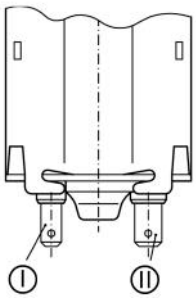

I Blade terminal ends 4,8 x 0,8 DIN 46 244
II Blade terminal ends 6,3 x 0,8 DIN 46 244

NIDEC MOTORS & ACTUATORS
Contact: +421 445 547 234
+421 903 390 520
www.opis.sk
opis@opis.sk