A Nidec Group Company
Nidec Motors & Actuators
All for dreams

# Series GMPD
## Motor type 404 747

| Design Data | |
|---|---|
| Commutation | Brushed |
| Direction of rotation | Bi-directional |
| Bearing type | A:Sleeve - B:Sleeve |

| Performance data | | |
|---|---|---|
| Rated voltage [V] | $U_N$ | 12 |
| Nominal torque [Nm] | $M_N$ | 3.00 |
| No-load speed [$min^{-1}$] | $n_0$ | 21.0 |
| Nominal power [W] | $P_N$ | 5.59 |
| Nominal current [A] | $I_N$ | 3.5 |
| Nominal force [kN] | $F_N$ | 0.00 |
| Duty cycle | | s3 |

| Sensor data | |
|---|---|
| Pulses | 0 |
| Output channels | 0 |

| Other data | |
|---|---|
| Gear ratio | 210/1 |
| Gear wheel material | plastic |
| Suppression components | 5,5µH, 47nF, (0,47µF) |
| Enclosure class | IP 40 |
| Weight [kg] | 0.440 |

Remarks:

**0320 BR**

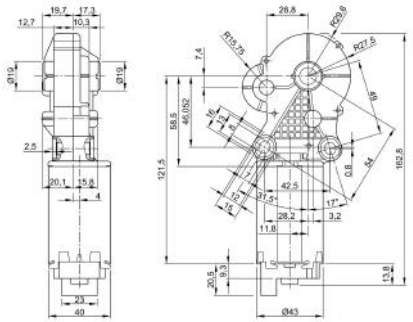

**Motor picture**

**Characteristic curves**

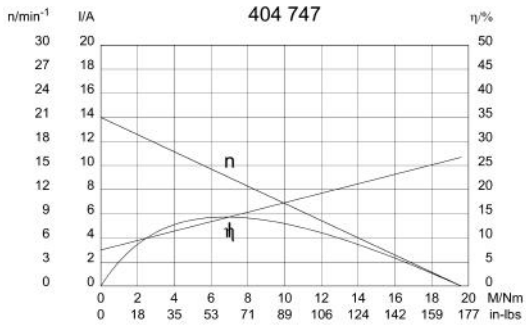


**Output shaft drawing (W), Wiring diagrams (S) and Connector layout (K)**

**W 270**

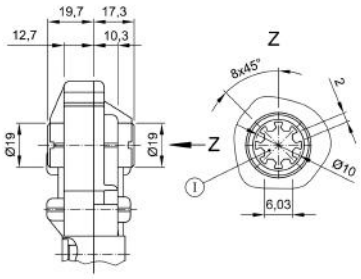

I through profile

**S 93**

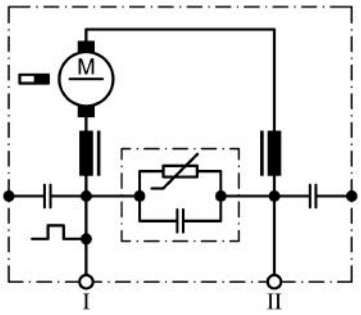

I Terminal 1
II Terminal 5

**K 220**

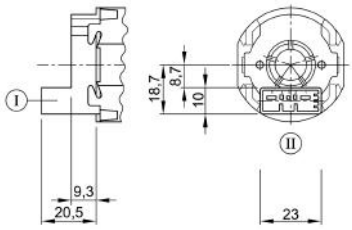

Connector TYCO C-208-15621 (Z) mating with:
**Connector housing** 1379217-3 **& cover** 1379218-2
www.tycoelectronics.com


**NIDEC MOTORS & ACTUATORS**
**Contact: +421 445 547 234**
**+421 903 390 520**
**www.opis.sk**
**opis@opis.sk**