A Nidec Group Company
Nidec Motors & Actuators
All for dreams

Series GMPD
Motor type 404 748

Design Data	
Commutation	Brushed
Direction of rotation	Bi-directional
Bearing type	A:Sleeve - B:Sleeve

0320 BR

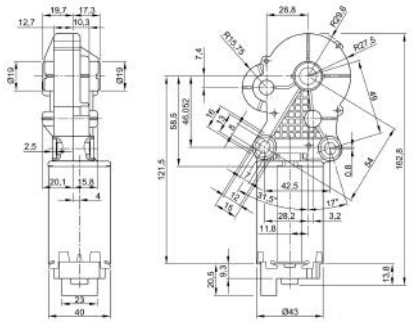

Performance data		
Rated voltage [V]	U_N	12
Nominal torque [Nm]	M_N	3.00
No-load speed [min^{-1}]	n_0	21.0
Nominal power [W]	P_N	5.59
Nominal current [A]	I_N	3.5
Nominal force [kN]	F_N	0.00
Duty cycle		s3

Sensor data	
Pulses	210
Output channels	1

Other data	
Gear ratio	210/1
Gear wheel material	plastic
Suppression components	5,5µH, 47nF, (0,47µF)
Enclosure class	IP 40
Weight [kg]	0.440

Remarks:

Motor picture

Characteristic curves

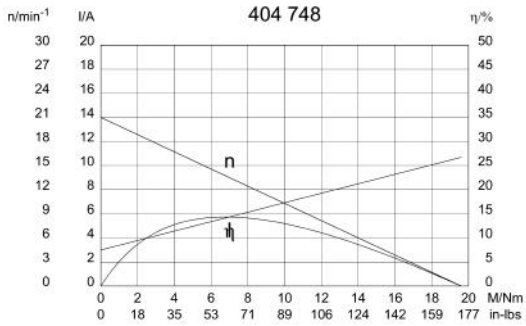

Output shaft drawing (W), Wiring diagrams (S) and Connector layout (K)

W 270

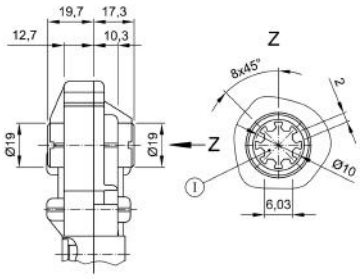

I through profile

S 86

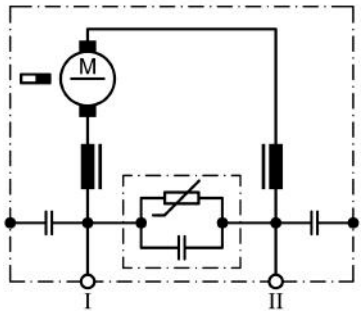

I Terminal 1
II Terminal 5

S 85

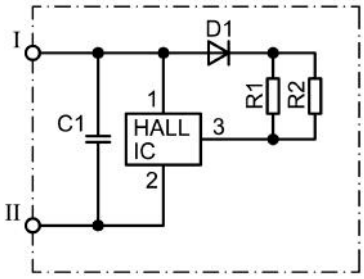

I Terminal 4, Hall-IC +
II Terminal 2, Hall-IC -

NIDEC MOTORS & ACTUATORS
Contact: +421 445 547 234
+421 903 390 520
www.opis.sk
opis@opis.sk

Output shaft drawing (W), Wiring diagrams (S) and Connector layout (K)

K 220

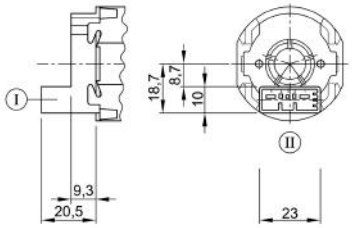

Connector TYCO C-208-15621 (Z) mating with:
Connector housing 1379217-3 **& cover**
1379218-2
www.tycoelectronics.com

Notes