A Nidec Group Company
Nidec Motors & Actuators
All for dreams

Series DCK31
Motor type 404 864

Design Data	
Commutation	Brushed
Direction of rotation	Bi-directional
Bearing type	A: ball - B:sleeve

Performance data		
Rated voltage [V]	U_N	24
Nominal torque [Nm]	M_N	4.00
No-load speed [min^{-1}]	n_0	66.0
Nominal power [W]	P_N	25.4
Nominal current [A]	I_N	4.0
Nominal force [kN]	F_N	0.00
Duty cycle		s1

Sensor data	
Pulses	0
Output channels	0

Other data	
Gear ratio	69/1
Gear wheel material	plastic
Suppression components	3,5µH, 1µF
Enclosure class	IP 30
Weight [kg]	1.210

Remarks: d = for thread-forming screw M6 DIN ISO 965-2

0266 AR

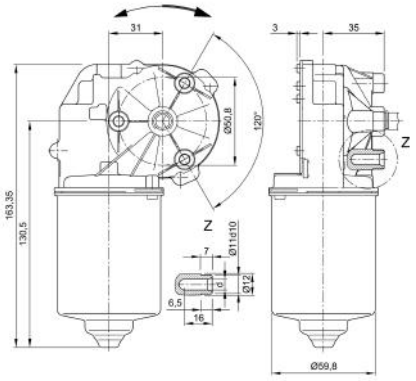

Motor picture

Characteristic curves

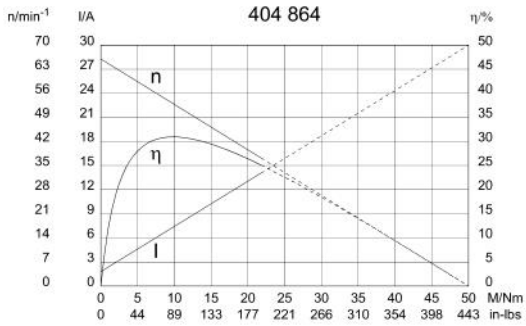

Output shaft drawing (W), Wiring diagrams (S) and Connector layout (K)

W 289

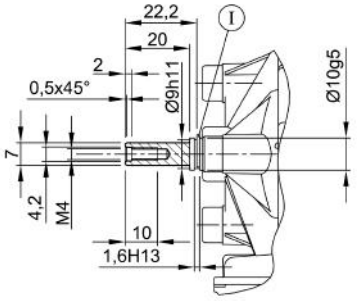

S 30

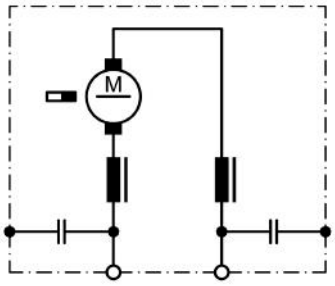

K 320

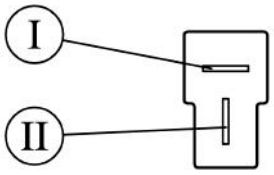

I Circlip

Flat plug (DIN 46244) 6,3x0,8 mating with receptacle housing part#180907, drwg# C-180907& Receptacles for tabs, conductor cross section 0,5-1,5 sqmm (20-18AWG) part# 925603-x, drwg# 925603 www.tycoelectronics.com

NIDEC MOTORS & ACTUATORS
Contact: +421 445 547 234
+421 903 390 520
www.opis.sk
opis@opis.sk